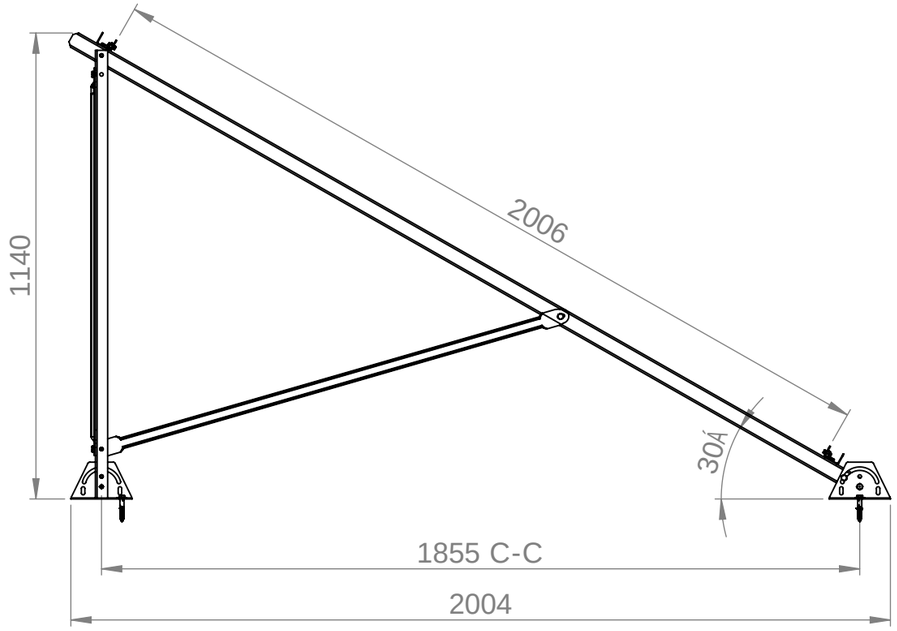

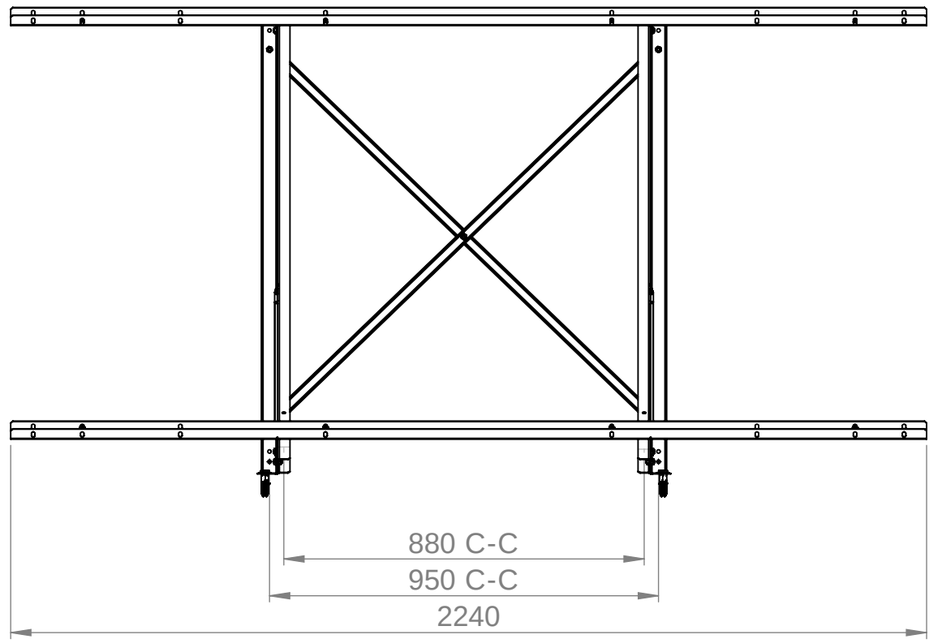

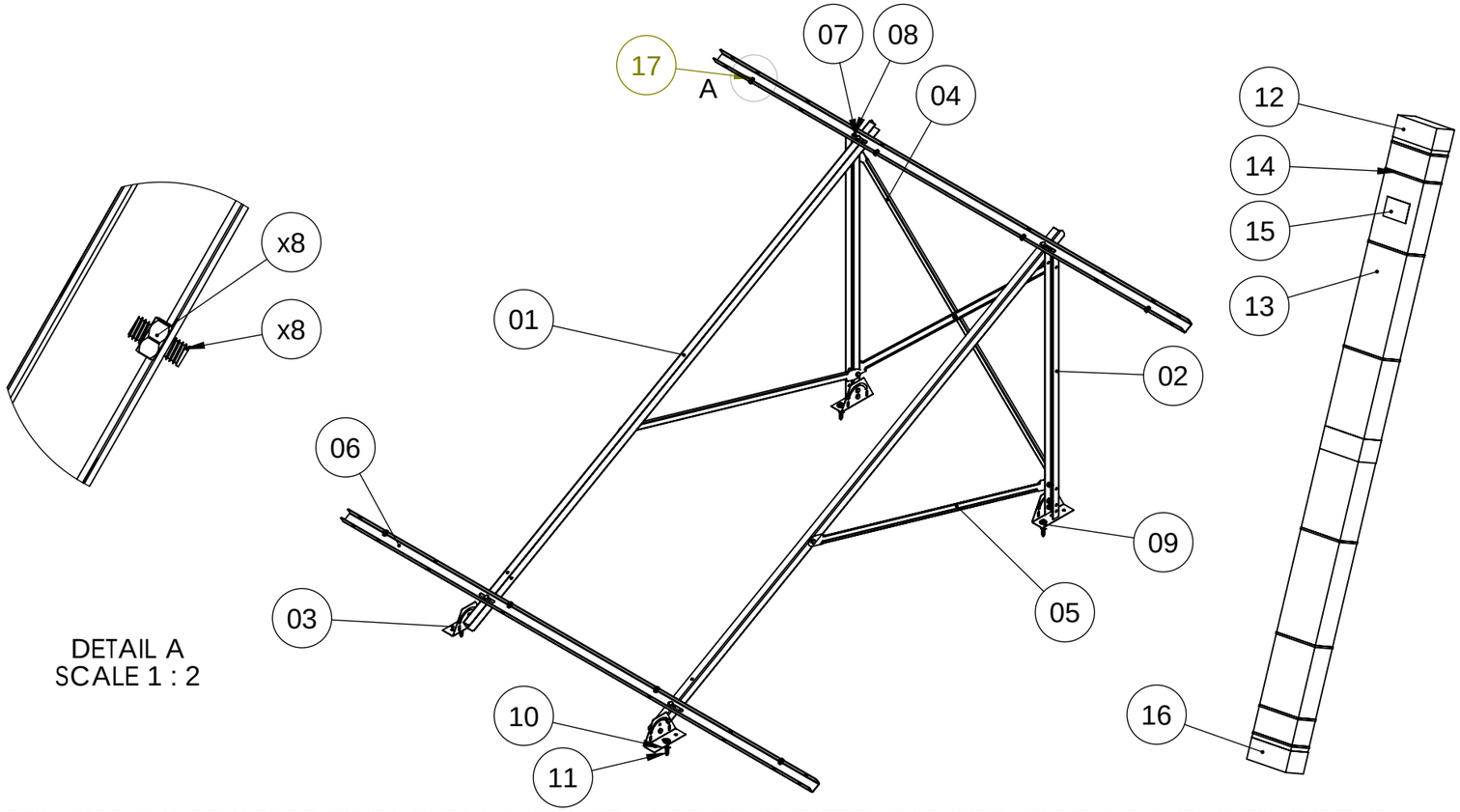

DETAIL A
SCALE 1 : 2

N/N	GROUP	CONSUMED ITEM CODE	DVCD
17	MOUNTING STRUCTURE FASTENING FITTING	105192	304
16	PACKAGING	107564	753
15	PRODUCT^S PACKAGING LABEL	107318	760
14	PRODUCT^S PACKAGING BOX STRAP	107026	751
13	PACKAGING	107310	890
12	PRODUCT'S PACKAGING CARTON BOX	108511	828
11	FLOOR-MOUNTING STRUCTURE FASTENING FITTING	102115	0
10	FLOOR-MOUNTING STRUCTURE FASTENING FITTING	101479	0
09	MOUNTING STRUCTURE FASTENING FITTING	105180	0
08	MOUNTING STRUCTURE FASTENING FITTING	107725	0
07	MOUNTING STRUCTURE FASTENING FITTING	105178	0
06	COLLECTOR-MOUNTING STRUCTURE HOLDER	109017	1114
05	F-R LEG TRUSS	109033	1122
04	R-R LEG TRUSS	109033	1122
03	FLOOR PAD	109438	0
02	REAR LEG	109017	1114
01	FRONT LEG	109017	1114

GROSS WEIGHT(kg)	GENERAL TOLERANCE: ±1mm				
UNITS: MM	SCALE: 1:10	ITEM CODE: 109548	DVCD: 0	N/N SH (Revision): 3908	DATE OF ISSUE: 02/04/22

CREATOR: George Koutsomichalis

ITEM DESCRIPTION: SOLAR COLLECTOR FLAT ROOF MOUNTING STRUCTURE NEO M30/2,00m SC-2 B/2,24m

DVCD DESCRIPTION: #

DIMAS SA RESERVES THE RIGHT TO CHANGE THE DATA OF UTILITY COMPONENTS, PRODUCTION CONDITIONS AND NOTICES UNDER WHICH THEIR PRODUCTS ARE OFFERED, WITHOUT NOTICE TO IMPROVE RELIABILITY, FUNCTION OR DESIGN OR OTHERWISE.
THE REPRODUCTION, DISTRIBUTION AND UTILIZATION OF THIS DOCUMENT WITHOUT EXPRESS AUTHORIZATION IS PROHIBITED. DIMAS SA, ALL RIGHTS RESERVED IN THE EVENT OF THE GRANT OF A PATENT, UTILITY MODEL OR DESIGN.